ULTRALOX®
INTERLOCKING TECHNOLOGY

# INSTALLATION INSTRUCTIONS

FOR OTHER INSTRUCTIONS AND VIDEOS, VISIT
**WWW.ULTRALOX.COM**

# 3" ALUMINUM POST INSTALLATION

It is the responsibility of the installer to meet all local code requirements and obtain all required building permits. The installer should determine and implement appropriate installation techniques for each installation situation. ULTRALOX® or its reseller shall not be held responsible for improper or unsafe installation.

**SUGGESTED TOOLS:** Cordless Drill, 3/16" Drill Bit, 5/8" Drill Bit (optional), Safety Glasses

**IMPORTANT NOTE:** Do not install base plate cover until railing assembly is completed. 3" posts are required to reach 6' and 8' lengths.

**CAUTION! IF INSTALLING LIGHTING, WIRING MUST BE INSTALLED PRIOR TO SECURING POSTS TO DECK SURFACE AND INSTALLING TOP RAIL SNAPS.**

## STEP ONE - Determine necessary posts required and prepare (end, center or corner)

- Refer to Panel Install Instructions. Install lower clip on post and secure with (2) - #8x3/4" TEK screws (Dia. #1). Clips are located in the Panel Kit.

## STEP TWO - Securing Posts to Deck

Install proper post blocking as per (Dia. #2). Use proper attachment screws or anchors as directed below. (Deck screws at each post location, are not included with kits).

- With 3/16" drill bit, pre-drill through deck boards and into blocking.
- Drill a 5/8" hole in center of four deck screw holes for lighting wires (optional).
- Level and plumb post using shims.
- Secure posts to deck with suggested screws.

## STEP THREE - Installing post cap and post base plate vinyl cover*

- Install post cap (Dia. #3)
- *Install base plate cover after railing assembly is completed. (Dia. #3)

**POST-TO-SURFACE MOUNTING SCREWS:**

3" Posts – Residential Deck Applications – 5/16" X 6" Exterior construction washer head lag screw

3" Posts – Commercial Deck Applications – 3/8" X 6" Exterior construction washer head lag screw

2" Posts – Res. & Com. Deck Applications – 3/8" x 6" Exterior construction washer head lag screw

3" Posts – Residential Concrete Applications – Tapcon® 5/16" x 3" Hex Washer Head Concrete Anchor

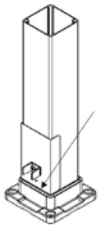

**Dia. #1**

Rest jig on Base Plate here - Arrow Down

Place Clip in hole, hold clip firmly while installing (2) TEK Screws.

**Dia. #2**

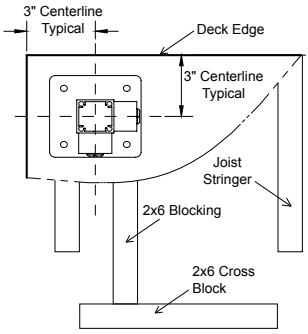


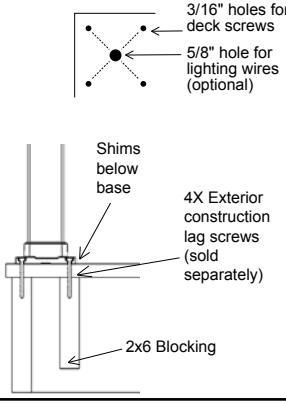


**Dia. #3**

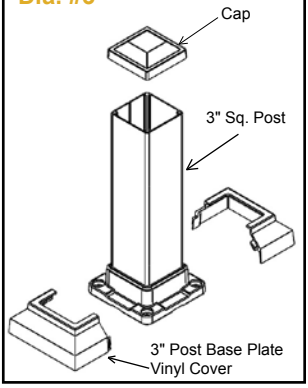


©2020 ULTRALOX INTERLOCKING®. All Rights Reserved. Version 2.3

ULTRALOX®
INTERLOCKING TECHNOLOGY

# OTHER PRODUCTS AND ACCESSORIES

**3" LED Post Cap Perimeter Light**

**3" LED Post Cap Indirect Light**

**3" Solar LED Post Cap Light**

**3" Low Profile Post Cap**

**Railing Accessories**

**ADA Handrail Kits**

FIND FULL PRODUCT OFFERING AND ACCESSORIES AT
**WWW.ULTRALOX.COM**